From the proceedings of the Association of Energy Engineers (AEE),
World Energy Engineering Congress (WEEC), October 2002.

TECHNOLOGY DEMONSTRATION: MAGNETICALLY-COUPLED ADJUSTABLE SPEED DRIVE SYSTEMS

William D. Chvala, Jr., CEM
David W. Winiarski
Pacific Northwest National Laboratory[1]
U.S. Department of Energy, Federal Energy Management Program

ABSTRACT

Adjustable speed drive (ASD) technologies have the ability to precisely control motor system output and produce a number of benefits including energy and demand savings. This paper examines the performance and cost effectiveness of a specific class of ASDs called magnetically-coupled adjustable speed drives (MC-ASD), which use the strength of a magnetic field to control the amount of torque transferred between motor and drive shaft. The MagnaDrive? Adjustable Speed Coupling System (referred to hereafter as the MagnaDrive Coupling) uses fixed rare-earth magnets and varies the distance between rotating plates in the assembly. The PAYBACK? Variable Speed Drive (referred to hereafter as the PAYBACK Drive) from Coyote Electronics uses an electromagnet to control the speed of the drive.

Laboratory testing was conducted at the Motor Systems Resource Facility at Oregon State University, to evaluate performance for the MagnaDrive, PAYBACK, and a common variable frequency drive (VFD) when connected to a 50-hp motor driving three different load profiles: fan, low head pump, and high head pump. The testing consistently showed that in the upper speed range (80 to 100% of full speed) the MC-ASD efficiency was typically between 2 to 4% less than a comparable VFD. However, in the lower speed range (less than 50%), the VFD was substantially more efficient, often using less than one half of the energy of the MC-ASDs.

Based on the test data, a life-cycle cost analysis was performed using a 50-hp fan retrofit as an example. The VFD performed the best, saving 61,120 kWh/yr over the baseline conditions. Assuming $0.06 per kilowatt-hour with no demand charges produced a simple payback of 2.4 years. The PAYBACK Drive had the best simple payback at 1.9 years because of its low purchase and installation costs. The MagnaDrive, which has the highest initial cost (purchase and installation), produced a simple payback of 4.6 years. Long-term operations and maintenance costs were not considered, which skews the comparison because technologies like MC-ASD are designed with reduced maintenance costs in mind.

Based on the results of this study, the MC-ASD technology shows good potential for new construction and retrofit application in Federal facilities. The MagnaDrive appears best suited for direct-drive loads, especially on very large motors. The design of the PAYBACK Drive makes it ideal for belt-driven loads.

INTRODUCTION

Most large electric motors run at a nearly constant speed, although the devices they drive – particularly pumps, fans, or blowers – represent loads that vary over time. Commonly, flow is regulated by partially closing a valve or damper in the system (throttling) or allowing some of the flow to go through a bypass loop. These methods are effective, yet inefficient in terms of energy consumption of the system. ASD technologies provide a better method

[1] Pacific Northwest National Laboratory is operated by Battelle Memorial Institute for the U.S. Department of Energy under contract DE-AC06-76RLO 1830.

of control by either causing the motor to rotate at varying speeds, as is the case with a VFD, or by providing a clutch between the motor and load to introduce some "slip" in the system, causing the output drive speed to be variable. A number of different products fall into the latter category, where the motor speed remains relatively constant and the speed of the output shaft is adjustable. These include variable diameter pulleys, mechanical clutches, and a unique category called magnetically-coupled adjustable speed drives (MC-ASD). The MC-ASD uses changing magnetic field strength within a coupling attached to the motor shaft to adjust the amount of torque transferred to, and thus the speed of, the drive shaft. This demonstration focuses on two unique applications of the MC-ASD technology – a fixed magnet coupling and a uniquely packaged electromagnetic coupling.

ASDs can save substantial energy when applied to variable-torque loads, such as fans, blowers, and most centrifugal and axial pumps. All fluid flow is governed by the Affinity Laws, whose equations describe pressure differences and fluid flow in closed systems. The Affinity Laws state that, for a fixed system, the torque of the motor varies in proportion to the square of the speed of the fluid flow. In addition, the horsepower (work input) varies in proportion to the cube of speed. This cubic relationship between speed and input power is where energy savings are realized. For example, if fan speed is reduced by only 20%, motor horsepower (and therefore energy consumption) is reduced by nearly 50%. The ability to control output speed is important because even small reductions in speed will produce significant savings because of the cubic relationship. Although the energy savings mechanism for all ASDs is the same, in reality inefficiencies in the design of different speed control technologies introduce losses, resulting in different levels of motor power savings.

The purpose of this demonstration is to quantify the performance of two MC-ASDs in a controlled laboratory environment and address the benefits and limitations of each. The U.S. Department of Energy and Pacific Northwest National Laboratory do not specifically endorse or sponsor the devices or manufacturers described in this study, other than to present the specific data collected during this study.

ABOUT THE TECHNOLOGY

The MC-ASD technology can be divided into two types: fixed magnet and electromagnet. This demonstration focused on two unique applications of the MC-ASD technology: The MagnaDrive Coupling, marketed by MagnaDrive, Inc, and the PAYBACK Drive, marketed by Coyote Electronics.

The MagnaDrive Coupling is a fixed magnet MC-ASD that uses permanent rare-earth magnets fixed to a rotating disk to generate eddy currents in a copper conductor assembly fixed to the load shaft (see Figure 1). By mechanically varying the physical distance between the conductor assembly that rotates at motor speed (shown in crosshatch pattern) and the magnet rotor assembly that rotates at the load speed (shown in gray shading), the amount of torque produced on the load shaft can be varied. A photo of an actual installation is shown in Figure 2, with the protective shroud removed for illustration purposes. The MagnaDrive Coupling is controlled by a mechanical actuator that uses a pneumatic or electronic process control signal to modulate the speed or torque output of the coupling.

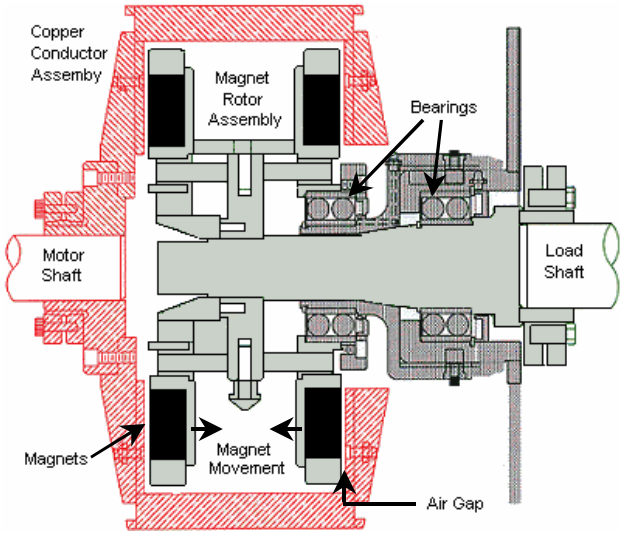

FIGURE 1. MAGNADRIVE SCHEMATIC

FIGURE 2. PHOTO OF MAGNADRIVE COUPLING WITH PROTECTIVE SHROUD REMOVED

The MagnaDrive Coupling is available in horizontal and vertical mounted designs. Drives are named by their size and will handle peak torque ranging from 1,200 to 19,320 lb-in. depending on the model chosen. This represents applications ranging from 25-hp, 900-rpm motors all the way up to 500-hp, 3600-rpm motors.

The PAYBACK Drive uses an electromagnet to transfer torque across a fixed-width air gap (see Figure 3). Changing the current supplied to the permanent electromagnet in the assembly varies the magnetic field and the amount of torque transferred. The PAYBACK Drive clamps to the motor shaft. Its internals rotate at motor speed (shown as light gray) and the external casing is mounted on a bearing, allowing it to rotate independently at load speed (shown as dark gray). This design makes the PAYBACK Drive, with its integrated belt grooves, ideally suited for belt-driven loads. It can also be used in a direct-drive system by purchasing an assembly that connects the belts to a shaft assembly, which in turn can be directly connected to any direct-driven load. A photo of a motor-drive assembly is shown in Figure 4 with a protective shroud in place surrounding the entire drive assembly.

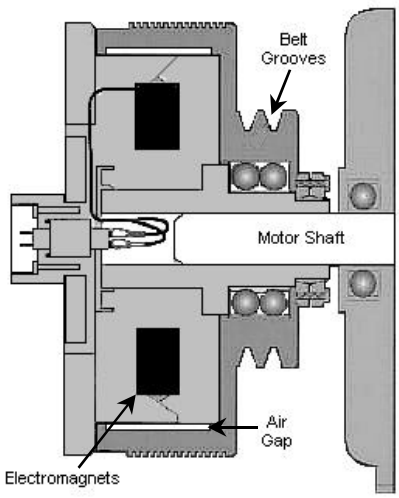

FIGURE 3. SCHEMATIC OF PAYBACK DRIVE

FIGURE 4. PAYBACK DRIVE AND MOTOR PACKAGE

The PAYBACK Drive is currently available in nine models, which fit 3- to 200-hp motors. The speed controller for the PAYBACK Drive operates on 115 volts AC (no more than 3 amps are needed for the controller) and provides adjustable voltage output to the drive's electromagnets. The controller accepts current, voltage, or pressure transducer signal inputs, and can interface with most energy management systems. The controller is also equipped with a potentiometer to manually vary output speed.

Installation

Both types of MC-ASD technologies are well-suited to retrofit applications and new installations. These devices can be used in either a solid shaft connection or a belt-driven connection between motor and load.

For direct-drive systems, where the motor shaft is connected directly to the load, the shaft is disconnected or cut to insert the MC-ASD coupling. When using the MagnaDrive Coupling, the motor is generally moved 12 to 18 in. further from the load shaft to provide space to insert the coupling between the motor and driven load. The conductor assembly is bolted to the motor drive, and the magnet rotor assembly is bolted to the load shaft. The two shafts should be in good alignment, although the MagnaDrive Coupling will tolerate a significantly greater degree of misalignment than would be suitable for a solid shaft connection between load and motor. Finally the control signal is connected.

The PAYBACK Drive can also be used in a direct-drive process, but requires installation of the direct-drive assembly at additional cost. The direct-drive assembly requires approximately the same amount of floor space, because the motor is mounted above a new drive shaft. Installation requires good alignment of the new drive shaft with the driven load and some alignment of the belts between the PAYBACK Drive and the new drive shaft. Finally the control signal is connected.

For belt-driven systems, such as most fans and blowers, the PAYBACK Drive is often a simple replacement of the pulley assembly attached to the motor. Disconnect the existing pulley, bolt on the coupling, install and align the belts, connect the control signal, and it's operational. Generally there is no need to move the motor itself. The MagnaDrive Coupling can also be used in belt-driven applications by either converting the belt-driven system to a direct-driven system if that can be done, or adding a pulley to the output shaft of the drive. In either event, it is likely that the position of the motor would have to be changed.

Benefits

When compared to a motor system with no speed control, the MC-ASD systems (and most VFD systems) offer many benefits in addition to energy savings. Systems where flow is controlled by throttling with a valve or damper often have vibration problems from turbulent flow, cavitation, and water hammer. These affects are eliminated with the addition of an ASD system. ASD

systems provide a method of slowly starting a motor to reduce initial in-rush current and prevent a lowering of distribution system supply voltage. Smaller size motors are possible because motors no longer have to be oversized for large starting loads or shock absorption of instantaneous peak loads. MC-ASDs (and some VFDs) can be easily implemented in retrofits as well as new construction.

In addition to these benefits, the MC-ASD systems provide the following additional benefits, which are not found in electronically controlled ASDs (e.g., VFDs). The motor shaft and drive shaft in the MagnaDrive Coupling are physically separated by an air gap, making it tolerant of some degree of misalignment. MC-ASDs introduce an insignificant amount of harmonic distortion to the power grid and will not shut down during voltage sags like some VFDs. When a VFD slows down a motor, it also reduces cooling from internal motor fans, which could potentially damage the motor's internal windings. MC-ASDs control speed while operating the motor at full speed. MC-ASDs do not require inverter-duty motors, which can cost 30% more than standard, high-efficiency motors and are recommended for VFD systems. Finally, MC-ASDs are primarily mechanical devices and are more easily serviced, repaired, or replaced by on-site staff. Their simple design is intended for long-life and serviceability.

APPLICATIONS

The MC-ASD is suitable for use anywhere an ASD could be applied, commonly pumps, fans, and blowers. In general, all large loads with throttled output (partially closed dampers or valves) or bypass loops to control flow velocity or pressure should be evaluated for ASD retrofit. For ASDs to be cost effective, the motor/load system should have significant operating time at part load.

When deciding which MC-ASD technology to use, there are two primary factors to consider: drive type (direct- or belt-driven) and drive size. The PAYBACK Drive is generally more suited to belt-driven systems and is an easy retrofit, with drives sized for 3- to 200-hp motors. The MagnaDrive Coupling can also be used for belt-driven applications by installing an additional pulley and shaft support.

In small to medium size direct-drive systems it is possible to use either MC-ASD technology. The MagnaDrive Coupling is the easiest to connect to direct-drive loads. The PAYBACK Drive can also be connected to a jackshaft (available from the manufacturer), which itself is directly connected to the load shaft. In very large direct-drive systems, the MagnaDrive Coupling is the only option. It can operate on motors between motors of all speeds with sizes up to 1500 hp and with voltage greater than 2840 volts.

Constant torque systems should be avoided because the large amount of slip generates a significant amount of heat in the coupling. Situations where the MC-ASD provides a great amount of speed control for a large percentage of its operating hours should be avoided. Providing a large amount of slip decreases drive efficiency because energy is lost in dissipated heat. For example, an MC-ASD should not be used in a direct connection to attempt to drive a fan at 750 rpm when connected to an 1800-rpm motor. If by motor downsizing, changing pulley ratio, or staging a series of motor/pumps the motor will operate a greater portion of the time at higher speeds, this will improve the suitability for the MC-ASD devices. These actions should be considered anytime an MC-ASD is applied to get the smallest motor and MC-ASD coupling possible.

Maintenance

Both MC-ASD technologies require little additional maintenance. The MagnaDrive Coupling has two bearings and four pivot assemblies that require periodic greasing. After about 40,000 hours of operation, the drive should be checked and, if needed, the bearings replaced. The PAYBACK Drive uses sealed for life bearings that require no maintenance. Power is supplied to the drive through a brushless rotary connector that should be replaced every 3 years. Both MC-ASDs can be repaired using off-the-shelf parts by local mechanical staff.

Costs

Costs for the MC-ASD drives as of January 2002 are shown in Table 1. As more units are produced and more orders received, the cost of the MC-ASD drives continues to decrease. The drive manufacturer will help determine

TABLE 1. MC-ASD STANDARD COST SHEETS FOR 2002

MagnaDrive Coupling			
Model Size	Approx. Motor, hp	Retail Price	GSA Pricing
8.5	= 25	6,440	6,096
10.5	25-50	9,090	8,581
12.5	50-75	10,582	9,974
14.5	75-125	11,830	11,147
16.5	125-150	15,160	14,244
18.5	150-200	18,410	17,269
20.5	200-250	21,385	20,047
22.5	250-350	24,800	23,320
24.5	350-500	29,600	27,740
26.5	500+	34,400	32,160

PAYBACK Drive		
Model	Approx. Motor, hp	Retail Price
EASY-1	3-5	1,600
EASY-2	7.5-10	1,800
EASY-3	15-25	2,500
EASY-4	25-30	3,300
EASY-5	40-50	4,900
EASY-6	60-75	7,200
EASY-7	100-125	9,400
EASY-8	150	14,000
EASY-9	200	16,800

which drive is needed through an engineering evaluation of the motor/load system.

Installation costs can vary significantly for each facility and each motor. On average, it should take two mechanics between 2 and 4 hours to retrofit an MC-ASD to an existing motor system. It is important to note that these devices do not require an inverter duty motor or additional electronics cabinetry or cabling. Contact your local utility because many offer technical support and financial incentives for motor speed control technologies.

LABORATORY TESTING

To accurately compare the two MC-ASD technologies under identical conditions, these devices were tested at the Motor Systems Resource Facility (MSRF) located on the campus of Oregon State University. The goal was to test the system efficiency of three different ASD systems connected to the same 50-hp motor. Each ASD system was used to drive three different load profiles: 1) a variable-flow fan, 2) a variable-flow pump with high static head, and 3) a variable-flow pump with low static head. Each load profile was represented using a dynamometer to ensure repeatability.

System efficiency was measured for each load profile in four separate configurations: 1) a VFD, 2) a MagnaDrive Coupling directly coupled to the load shaft, 3) PAYBACK Drive installed in a belt-drive system using the integral belt grooves and a 1:1 pulley ratio, and 4) MagnaDrive Coupling with an attached pulley in a belt-driven system using a 1:1 pulley ratio. A schematic of the four tests is shown in Figure 5.

Complete results of the laboratory testing will be available from the Federal Energy Management Program (FEMP) in a New Technology Demonstration Program document in summer 2002. A summary of the laboratory testing that highlights important issues is provided as follows.

Test Results: Fan Load Profile

Each of the four test configurations was used to drive the fan curve test profile, as shown in Figure 6. The VFD operated more efficiently than the MC-ASDs over the full range of speed control; although near full speed, the efficiencies of the three drives were similar. For example, at 1705 rpm (96% of full motor speed), the VFD used approximately 34 kW, the PAYBACK Drive used 36.3 kW, the MagnaDrive-Direct used 37.6 kW, and the MagnaDrive-Belt used 38.4 kW. The MC-ASDs use approximately 2.3 to 3.6 kW (6.8 to 13%) more power than the VFD at this speed. As fan speed is reduced, the MC-ASDs become much less efficient. However, because the overall power consumption is reduced at lower speeds, the MC-ASDs consume slightly more power. At 50% speed (~890 rpm), the VFD fan consumed 5.55 kW, while the PAYBACK, MagnaDrive-Direct, and MagnaDrive-Belt consume 5.74 (3%), 7.05 (27%), and 8.0 kW (44%) more power, respectively.

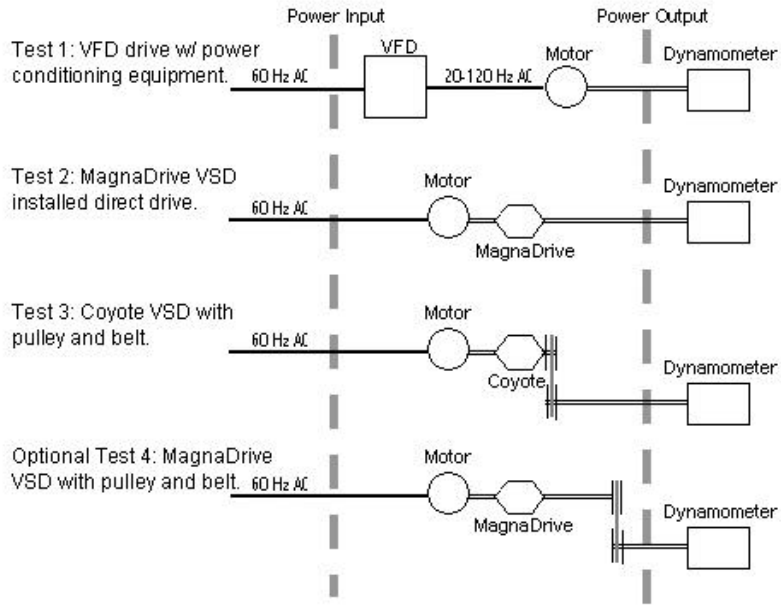

FIGURE 5. TESTING EQUIPMENT SCHEMATIC

Dividing the output motor shaft power by the input electrical power at each point calculates the efficiency of each combined motor/drive system. Figure 7 shows the drive efficiency as a function of fan shaft power (in kW). Notice that the VFD operated between 88% and 92% efficiency from the maximum power tested down to approximately 35% of maximum power consumption, with a sharp decline in efficiency below 35% output power. Both the MagnaDrive and PAYBACK showed a rapid degradation in efficiency as speed was reduced over the entire range of speeds tested.

The testing protocol called for meeting target torque values (rather than output speed values) across the range of operations to characterize each drive. This created a problem because the upper torque target represented the fan torque at 1800 rpm, which was above the nominal motor speed and unattainable for MC-ASDs. By over-driving the system, the drives were able to meet the target torque value, but at a lower speed. This point deviates from the fan curve being tested and gives a false value for the top speed of the MC-ASD devices. Likewise, the VFD system was able to meet the target torque at a full 1800 rpm, but accomplished this by supplying power at greater than 60 Hz. This also provides a false value for

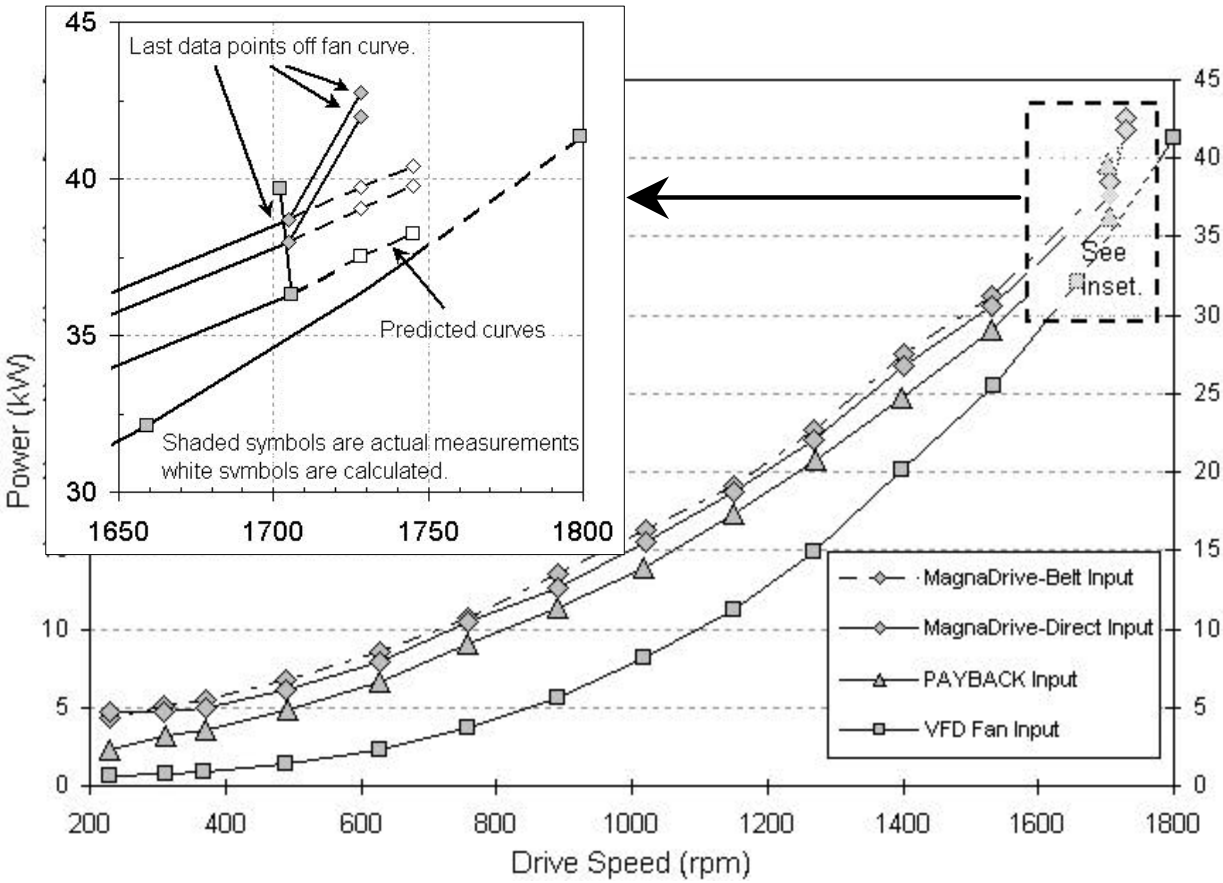

FIGURE 6. POWER CONSUMPTION OVER RANGE OF SPEED FOR FAN LOAD

the top speed because, in practice, full motor speed is a nominal value less than synchronous speed. Extrapolating each of the MC-ASD curves to a drive speed of 1750 rpm suggests maximum system efficiencies from 85.2% to 89.6% for the MC-ASDs and 90.6% for the VFD. Additional testing is being considered to explore what the curves should look like in this upper range and to determine what the true maximum speed is for each ASD.

The MagnaDrive-Direct appears to consume 1.5 to 2.3 kW more power than the PAYBACK for the fan speeds tested and is not influenced by changes in drive efficiency. This difference is most likely the result of the bearing losses and aerodynamic drag from the rotating magnet assembly. Discussion with the manufacturer revealed that these values were higher than expected and could be attributed to selecting a larger coupling than was needed. As the size and torque transmission capabilities of the models increases, the aerodynamic losses would be expected to become a much smaller fraction of the total power transmitted through the unit.

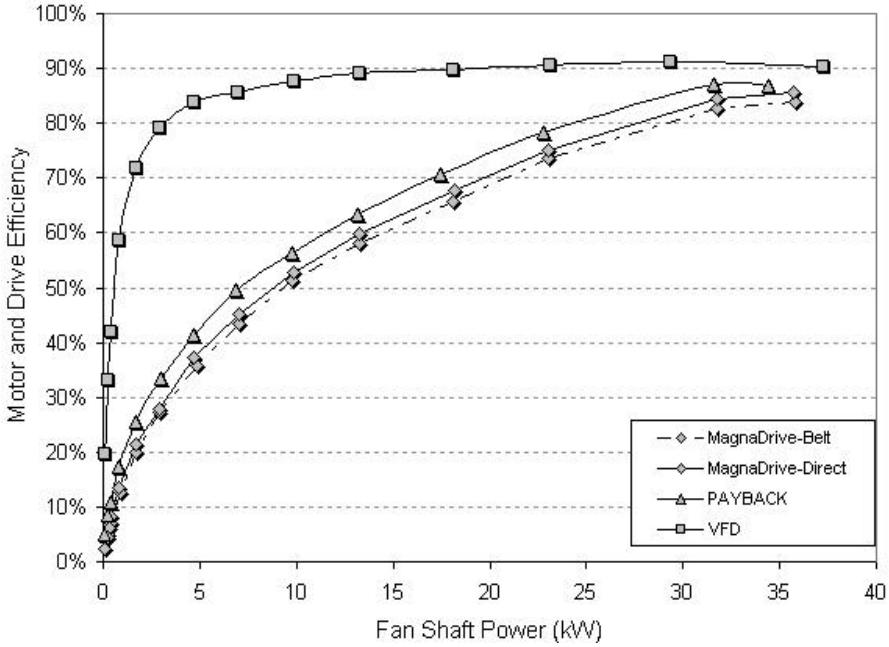

FIGURE 7. SYSTEM EFFICIENCY VERSUS SHAFT POWER

These "windage" losses and the problems determining the full speed point on the fan curve prevented the testing from proving if the MagnaDrive energy use would dip below the VFD curve near full load speed as the manufacturer claims it should. These tests were unable to substantiate this claim.

Tests also showed that the energy required to energize the electromagnetic in the PAYBACK Drive was almost negligible to the performance of the drive. Below 1600 rpm, the drive used between 13 to 24 watts to control slip within the drive. Above 1600 rpm, power consumption climbed steeply, but still used no more than 90 watts.

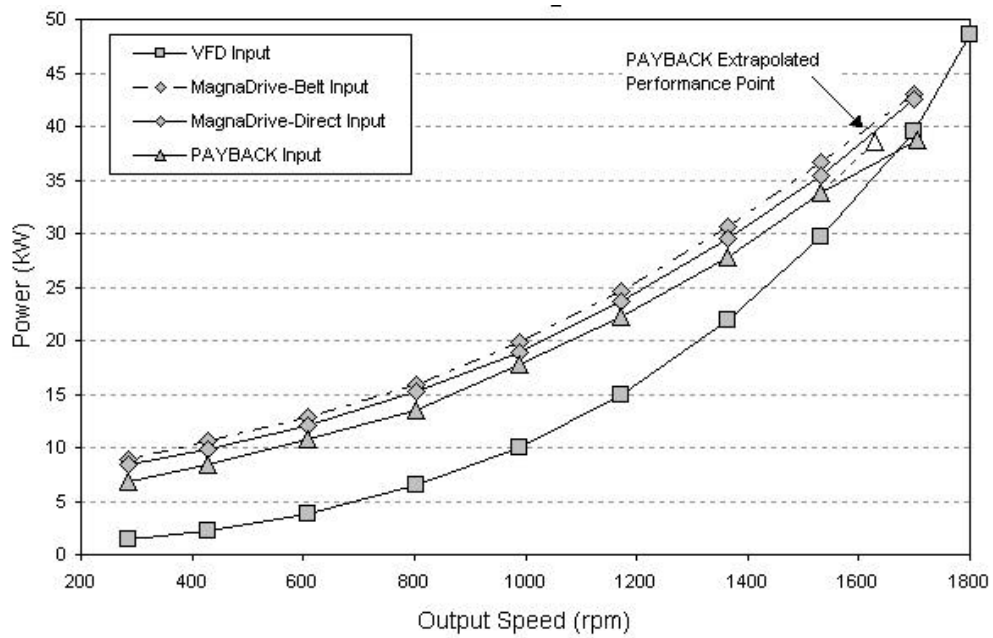

FIGURE 8. LOW HEAD PUMP POWER CONSUMPTION OVER OUTPUT SPEED

Test Results: Low Head Pump Application

Figure 8 shows power consumption over a range of output speed for each of the three technologies in a low head pump application.

In comparing the three systems, the VFD clearly showed the lowest power consumption. The MagnaDrive-Direct again consumed a roughly constant 1.5 kW more than the PAYBACK Drive, except at the very highest rpm point tested. At 1705 rpm, the PAYBACK Drive was not able to maintain the desired torque required for the pump curve. The torque requirements for this low head pump curve were approximately 16% higher than that of the fan test near 1700 rpm. This appeared to have been more torque than this size PAYBACK Drive could provide at that speed and is shown as a dip in the PAYBACK curve at top speed.

Test Results: High Head Pump Application

Figure 9 shows the power consumption in a high head pump application. In this application, the head pressure encountered by the pump was not purely a function of flow but was instead the sum of static and dynamic (flow) head. The principle impact of this was that the torque on the high head pump shaft is not a linear function of shaft rotational speed, making the power consumption of the pump a more complicated function of flow.

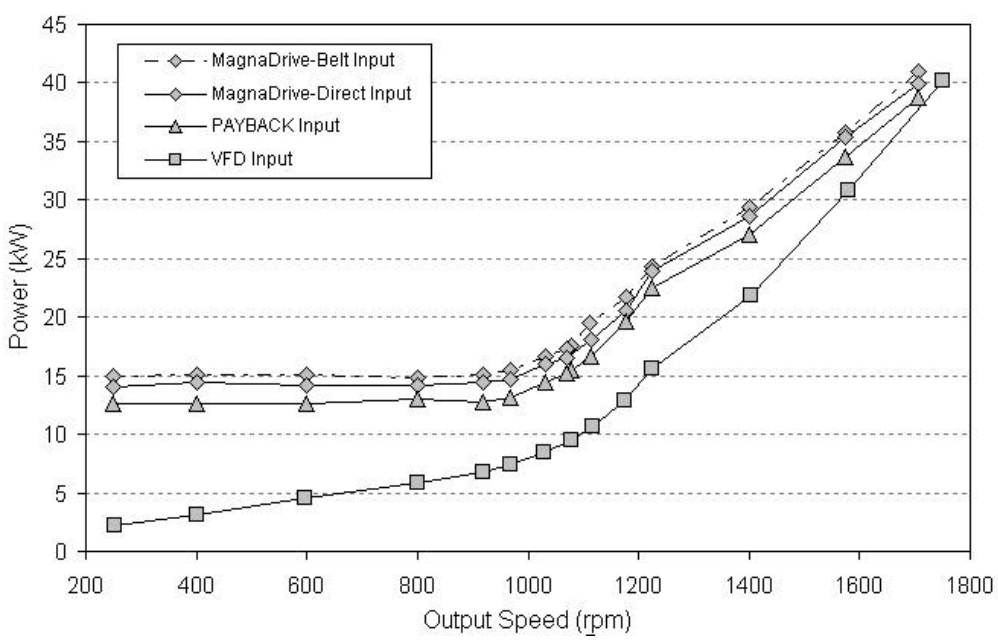

FIGURE 9. HIGH HEAD PUMP POWER CONSUMPTION OVER OUTPUT SPEED

High head pump applications appear to be an ideal application for MC-ASDs because they will operate a greater portion of the time at higher speeds, and being direct driven loads, are well-suited for the MagnaDrive Coupling. Unfortunately, problems determining the upper test points during laboratory testing do not reveal if the MC-ASD curves cross the VFD curve at high speeds.

Power Factor

Power factor for the VFD was lower than that of the MC-ASDs; however, total power was also lower. In a building application, it is the total kilovolt-amp reactive power (kVAR) produced by the motor drive system that is important. Total kVAR produced by each drive system (including the Payback electromagnetic controller) is shown in Figure 10. The kVAR produced by the VFD is higher at full load than that of the MC-ASDs, but drops below that of the MC-ASDs at about 1200-rpm drive speed. The reactive power curve produced by all MC-ASDs is nearly identical and appears to follows the typical reactive power curve for the motor in moving from an unloaded to a fully loaded condition.

It is important to also consider the ability to "control" the building power factor. The reactive power produced by the MC-ASD systems is the result of induction devices and is readily corrected through the addition of capacitance at the building electrical distribution level. The power factor generated by the VFD is the result of harmonics generated by the VFD electronics and is not easily corrected at either the building or drive level.

Test Conclusions

For all tests, the VFD was more efficient than the MC-ASDs at all speeds; however, the differences were relatively small at the highest speeds (above 1700 rpm). The PAYBACK Drive performed more efficiently than the MagnaDrive, typically saving the equivalent of 3 to 4% of the full-load power over the entire operating range. The MagnaDrive-Belt configurations also invariably used the equivalent of 1 to 2% of full-load power more than the MagnaDrive-Direct configuration, presumably as a result of belt losses.

The choice between using the MagnaDrive in a direct- or belt-driven configuration is expected to be driven by the use of either a fan or pump in most cases. Most pumps are designed to operate at near the full-load motor speed (corresponding to synchronous speeds of 900, 1800, or 3600 rpm) in a direct-drive application and would be sized accordingly to meet peak loads. Most large fans, however, are typically designed to be operated as a belt-and-pulley-driven load, with the choice of pulleys used to fine-tune a particular fan size to the peak air flow needed. Because the full-load fan speed required for the system being retrofit is less likely to be near the nominal full-load motor speed, using a MagnaDrive-Direct configuration is likely to result in unacceptable levels of slip losses, and a MagnaDrive-Belt configuration (or PAYBACK) represents a more reasonable choice despite the pulley losses.

These results highlight the importance of carefully considering the load profile when selecting the drive type (VFD or MC-ASD), as well as sizing the drive correctly for the application. If a large portion of the time is spent below about 80% of full speed, the VFD would outperform the magnetically coupled drives in terms of efficiency and expected energy savings. However, if the system operates primarily in the 80 to 100% of full flow range, the additional efficiency obtained from the VFD may be a relatively small fraction of total energy requirements. This test suggested that for high head pump applications using MC-ASDs, there may be a fixed speed below which there is little if any energy advantage obtained with speed reduction using a MC-ASD. Wide variations in flow requirements for these pumps suggest either the use of a single variable speed pump, or the use of multiple pump/motor combinations, some of which may use magnetically coupled drives.

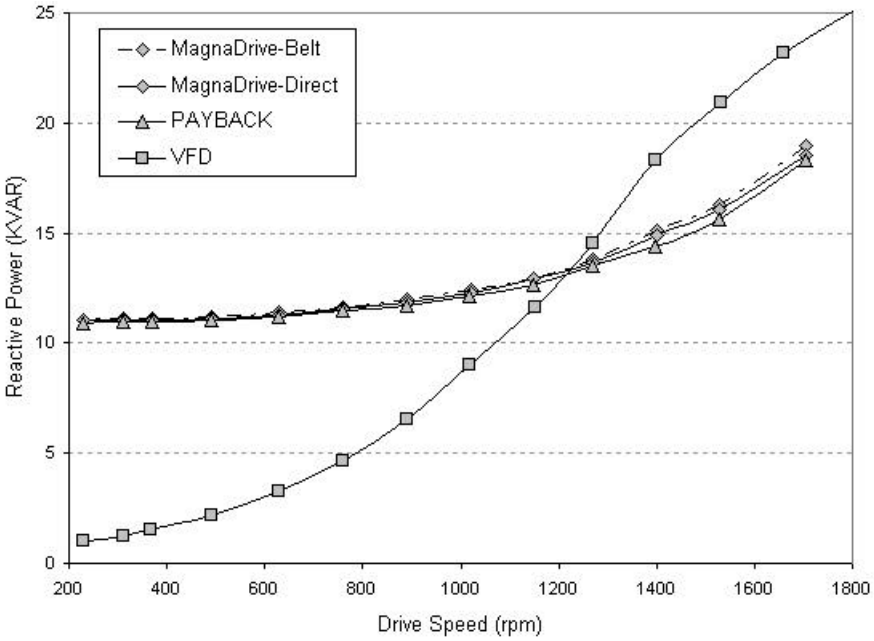

FIGURE 10. REACTIVE POWER GENERATED DURING FAN CURVE TEST

SAVINGS POTENTIAL

The life-cycle cost (LCC) of a potential retrofit is the present value of all the costs associated with the investment over the life of the equipment. The Building Life Cycle Cost (BLCC) program, developed by the National Institute of Standards and Technology, allows users to compare the life-cycle cost of several alternatives. LCC analysis is required of Federal agencies by 10 CFR Part 436.

Energy data from the 50-hp motor tested in the laboratory was used to construct a LCC analysis for a sample fan system typically found in Federal facilities. The three ASDs tested were compared to the "do nothing" conditions (often called the *baseline*). The following inputs were identified and included in the analysis:

? **Installed Cost.** The installed cost includes the cost of equipment (as of January 2002) and the labor required to install the ASD on a typical 50-hp motor retrofit. Note that the cost of the VFD does *not* include the replacement with an inverter-duty motor, which is recommended but not required.

? **Energy Cost.** Because the testing was performed without a specific city or region in mind, the energy cost was assumed to be $0.06 / kWh with no demand charges. Demand reduction was ignored because determining a good estimate for demand costs is problematic.

? **Energy Use.** The energy consumption for each drive systems was generated using the performance testing data from OSU and typical load profiles from QuikFan. QuikFan is an EnergyStar® software product designed to estimate the cost efficacy of retrofits on fan systems. QuikFan uses the performance curves of fan systems, typical or user supplied binned load profiles, and total hours of operation to estimate the total annual energy consumption for the same fan system with different drive systems or control applications. Default duty cycles representing typical fan systems were used to estimate annual energy consumption for the 50-hp motor used in testing.

? **Maintenance Costs.** Estimating long-term maintenance costs – including lubrication, routine parts replacement, and failures – proved difficult. Although MC-ASDs are expected to have reduced long-term costs, because they are a relatively new technology no hard data exists. Obtaining data for VFDs proved even more difficult, despite checking a number of sources. Conversations with in-field personnel seem to indicate that a VFD would be unlikely to reach a 20-year service life without any additional service and/or replacement. Unfortunately this information is largely anecdotal, with no solid data to substantiate these claims. It was decided that long-term maintenance costs would be omitted from the economic analysis because of the lack of solid data. This definitely skews the comparison because technologies like MC-ASD are designed with reduced maintenance costs in mind.

Life-Cycle Results for Fan Application

The sample system for the BLCC analysis is a typical 50-hp fan system, where speed control will be retrofit where none existed before. The fan system chosen operates on a 12-hour, workday-only schedule (3,476 hour per year) over a study period of 20 years (see Table 2).

The baseline option required no initial investment, but was expected to use 109,133 kWh/year, which is nearly double any of the alternatives. Compared to no speed control, any of the ASDs would be a smart retrofit, with simple payback ranging from 1.9 to 4.6 years.

The VFD used the least energy (41,013 kWh/year) and had the best life-cycle cost among the alternatives ($44,995). The Savings-to-Investment (SIR) of the VFD alternative was 6.74, with a simple payback of 2.4 years. Even if $5,000 for the purchase of an inverter duty motor

TABLE 2. BLCC PROGRAM INPUTS

Equipment Type	Purchase Price	Install Cost	Energy Use[1] (kWh/yr)	Life-Cycle Cost	SIR[2]	AIRR[3]	Simple Payback
Base case	$ 0	$ 0	109,133	$ 94,229	N/A	N/A	N/A
VFD	$ 8,582	$ 1,000	41,013	$ 44,995	6.74	13.64%	2.4 years
MagnaDrive	$ 11,147	$ 750	66,205	$ 69,061	3.26	9.58%	4.6 years
PAYBACK	$ 4,900	$ 500	59,160	$ 56,481	8.70	15.10%	1.9 years

[1] Energy consumption (kWh) per year based on test results over 20 year study period.

[2] Savings-to-Investment (SIR) ratio compares the investment for an alternative versus baseline. Higher numbers are better.

[3] Adjusted Internal Rate of Return (AIRR).

were added to the analysis, the life-cycle cost is still best at $50,395, with a simple payback of 3.9 years.

The MagnaDrive Coupling and the PAYBACK Drive were also excellent options compared to the base case, with life-cycle costs of $69,061 and $56,481, respectively. Although the VFD still performed more efficiently overall, these devices were competitive and may be more attractive given some of the additional benefits.

At 59,160 kWh/year, the PAYBACK Drive uses 45% less energy than the base case. With the lowest purchase and installation cost, it provides a simple payback of 1.9 years. The PAYBACK Drive had the best SIR of 8.70, indicating that it provided good savings (although not the most savings) with the least initial investment. For retrofits that fit its inherent design, it appears to be the ideal choice.

Of the three alternatives, the MagnaDrive Coupling used the most energy, 66,205 kWh/year, or 39% less than the base case. At $11,400, it was also the most expensive to install among the alternatives. A 50-hp motor is at the low end of the range of applications for MagnaDrive Couplings. In larger sizes, economies-of-scale make the purchase price more competitive. Even so, with a simple payback of 4.6 years, it can be an attractive option for certain retrofit applications on direct-driven loads, where operations and maintenance considerations (which were not considered in this analysis) are important.

Although a life-cycle cost analysis for a pump application is a natural next step, constructing a baseline scenario proved difficult without making a number of assumptions and was not specified in the laboratory testing. Both MC-ASDs are most efficient near full-load speeds and a pump application (especially with a high static head) would tend to operate at or near full speed a greater percentage of time.

CONCLUSIONS

Implementing speed control in motor systems represents an opportunity to gain additional control over system operations while yielding substantial energy savings. More traditional types of speed control (e.g., variable frequency drives) will continue to be a good option. This study has shown that the MC-ASDs will provide similar energy savings under certain conditions. The MC-ASDs are flexible for a variety of applications and are an easy retrofit. The simplicity of these devices remains a strong selling point because installation, maintenance, and repair can all be performed by in-house mechanical staff. The facilities that are using MC-ASDs have been happy with their performance and, in most cases, have purchased additional units after their initial experience. Although the MC-ASD technologies are fairly new (less than 10 years old), both products have been through several design iterations and have a well-established product.

ACKNOWLEDGEMENTS

This work was supported by the Department of Energy - Office of Federal Energy Management Programs (FEMP) under the New Technology Demonstration Program, whose mission is to reduce the cost of Government by advancing energy efficiency, water conservation, and the use of solar and other renewable technologies. A more detailed report on this project is available from the New Technology Demonstration Program. The authors wish to thank Mr. Ted Collins (FEMP) for supporting the work, the Motor Systems Resource Facility at Oregon State University for performing the testing, and MagnaDrive Corporation and Coyote, Inc. for their support and equipment loans.

ABOUT THE AUTHORS

Bill Chvála, Jr. (pronounced Koala, like the bear) is a senior research engineer in the Technology Systems Analysis group at Pacific Northwest National Laboratory (PNNL). Bill holds Bachelor of Science degrees in physics and applied mathematics from Nebraska Wesleyan University and a Master of Environmental Science degree, Energy emphasis from Miami University, Oxford, Ohio. Bill has been involved in field technology demonstrations, demand-side management, and load-shedding projects for FEMP. He manages the FEMP Design Assistance and Distributed Energy Resources technical assistance tasks at PNNL.

David Winiarski received a Bachelor of Arts and Science Degree in Physics from Oregon State University and a Master of Science degree in Mechanical Engineering from Texas A&M University with an emphasis on energy systems. During his academic career, David worked in the Energy Analysis and Diagnostic Centers at both Oregon State University and Texas A&M University. David also served 2 years as a Peace Corp Volunteer in Belize Central America where he taught high school physics and mathematics. David is currently a senior research engineer with Pacific Northwest National Laboratory's Energy and Engineering Technical Resources group.

REFERENCES

Chvála, W.D., Jr., Winiarski, D.W., and Mulkerin M.C. *Technology Demonstration of Magnetically-Coupled Adjustable Speed Drive Systems.* PNNL-13879 Pacific Northwest Laboratory, Richland, Washington, anticipated publication April 2002.